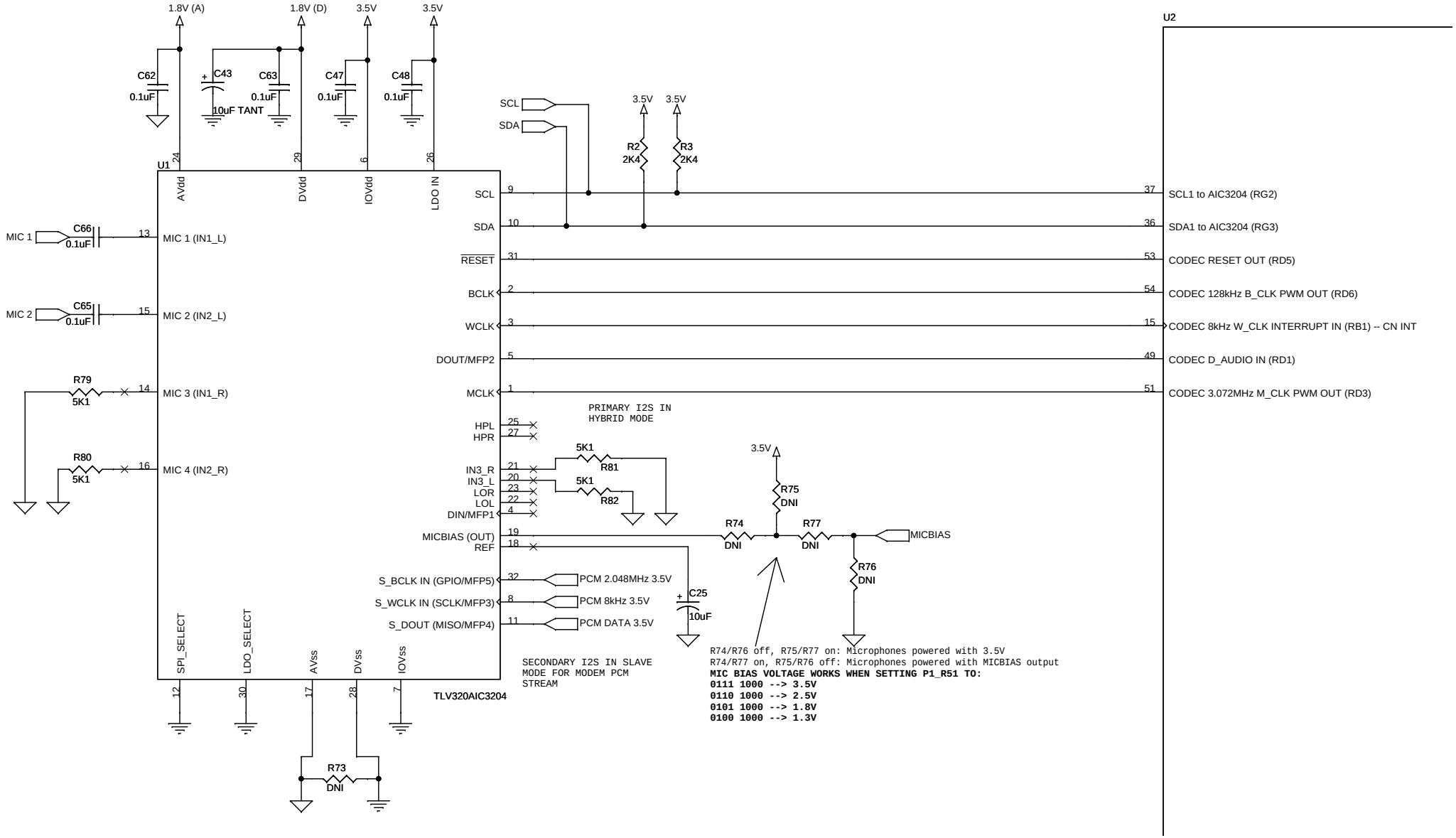
1.8V (A)
1.8V (D)
3.5V
3.5V
C62
0.1uF
C43
10uF TANT
C63
0.1uF
C47
0.1uF
C48
0.1uF
U1
AVdd
DVdd
IOVdd
LDO IN
MIC 1
C66
0.1uF
MIC 1 (IN1_L)
MIC 2
C65
0.1uF
MIC 2 (IN2_L)
R79
5K1
MIC 3 (IN1_R)
R80
5K1
MIC 4 (IN2_R)
SPI_SELECT
LDO_SELECT
AVss
DVss
IOVss
TLV320AIC3204
R73
DNI
SCL
SDA
R2
2K4
R3
2K4
RESET
BCLK
WCLK
DOUT/MFP2
MCLK
HPL
HPR
IN3_R
IN3_L
LOR
LOL
DIN/MFP1
MICBIAS (OUT)
REF
S_BCLK IN (GPIO/MFP5)
S_WCLK IN (SCLK/MFP3)
S_DOUT (MISO/MFP4)
PRIMARY I2S IN
HYBRID MODE
5K1
R81
5K1
R82
R75
DNI
R74
DNI
R77
DNI
MICBIAS
R76
DNI
C25
10uF
PCM 2.048MHz 3.5V
PCM 8kHz 3.5V
PCM DATA 3.5V
SECONDARY I2S IN SLAVE
MODE FOR MODEM PCM
STREAM
R74/R76 off, R75/R77 on: Microphones powered with 3.5V
R74/R77 on, R75/R76 off: Microphones powered with MICBIAS output
MIC BIAS VOLTAGE WORKS WHEN SETTING P1_R51 TO:
0111 1000 --> 3.5V
0110 1000 --> 2.5V
0101 1000 --> 1.8V
0100 1000 --> 1.3V
U2
SCL1 to AIC3204 (RG2)
SDA1 to AIC3204 (RG3)
CODEC RESET OUT (RD5)
CODEC 128kHz B_CLK PWM OUT (RD6)
CODEC 8kHz W_CLK INTERRUPT IN (RB1) -- CN INT
CODEC D_AUDIO IN (RD1)
CODEC 3.072MHz M_CLK PWM OUT (RD3)